2132 and 2116 PID Temperature Controllers

Installing and Operating Instructions

EUROTHERM CONTROLS

Thank you for choosing the 2132 or 2116 Temperature Controller. Supplied in 1/32 and 1/16 DIN panel sizes they are designed for accurate, stable control of ovens, chillers, sterilisers and other heating and cooling processes. Two outputs are configurable for heating, cooling and alarms.

The controller is supplied configured according to the order code given on page 11. Check this on the side labels to determine the configuration of your particular controller.

CE This controller meets the European Directives on safety and EMC.

DIMENSIONS AND INSTALLATION

Model 2132

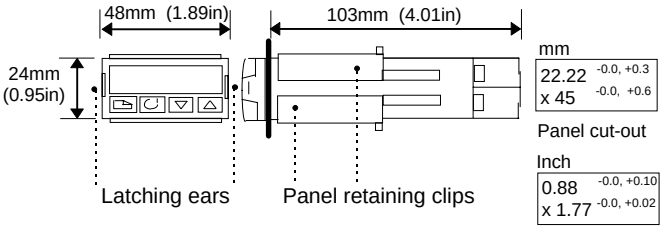

Model 2116

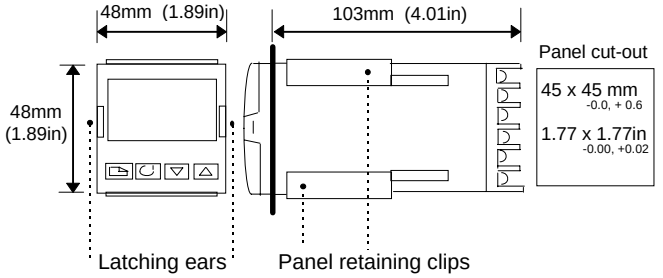

To Install the Controller

Please read the safety information on pages 11 & 12 before proceeding.

1. Prepare the panel cut-out to the size shown
2. Insert the controller through the cut-out.
3. Spring the panel retaining clips into place. Secure the controller in position by holding it level and pushing both retaining clips forward.
4. Peel off the protective cover from the display

Unplugging the Controller

The controller can be unplugged from its sleeve by easing the latching ears outwards and pulling it forward out of the sleeve. When plugging it back into its sleeve, ensure that the latching ears click back into place to maintain the IP65 sealing.

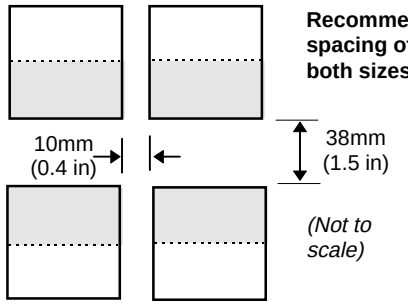

ELECTRICAL CONNECTIONS

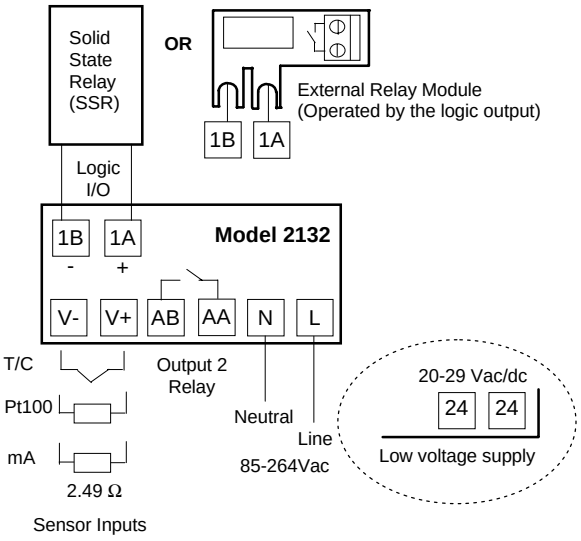

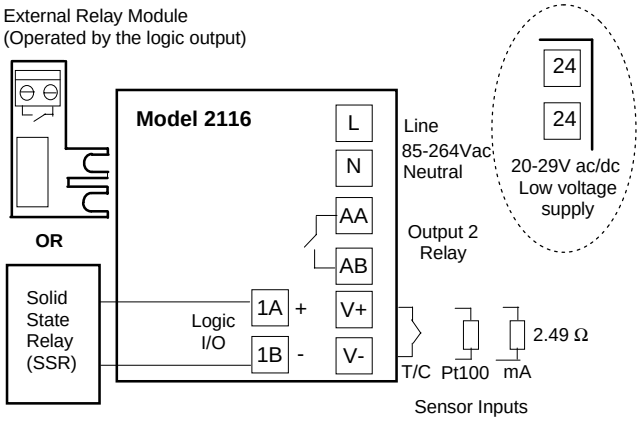

Wire Sizes

The screw terminals accept wire sizes from 0.5 to 1.5 mm (16 to 22AWG). Hinged covers prevent hands or metal making accidental contact with live wires. The rear terminal screws should be tightened to 0.4Nm (3.5lb in).

Output ratings

Logic Output: 9Vdc, 12mA (non-isolated from sensor input).
Used for: Heating, Cooling or Alarm.

Relay Output: 2A, 264V ac resistive.
Used for: Heating, Cooling or Alarm.

Contact Closure Input (replaces Logic Output).
Used for: Alarm Acknowledge or Timer start/reset

Typical Wiring Diagram

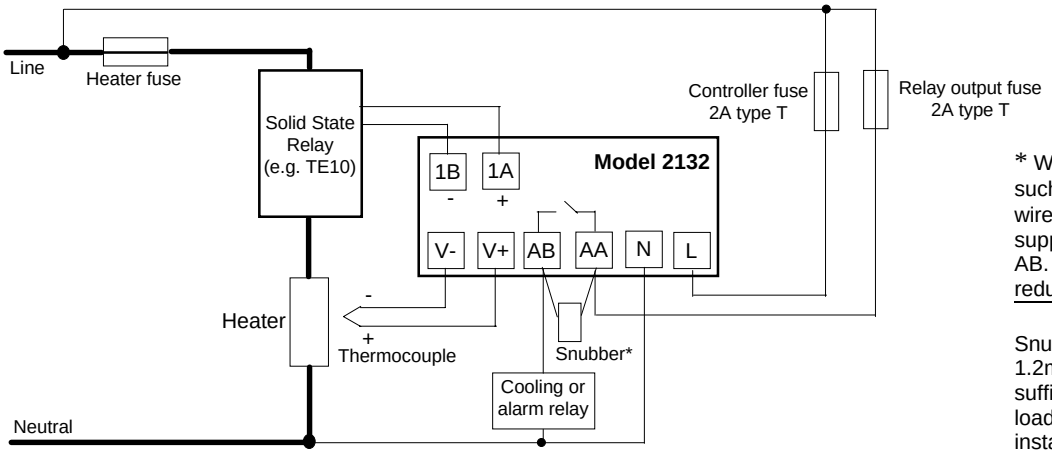

* When switching inductive loads such as contactors or solenoid valves, wire the 22nF/100Ω 'snubber' supplied across relay terminals AA & AB. This will prolong contact life and reduce interference.

WARNING

Snubbers pass 0.6mA at 110V and 1.2mA at 230Vac, which may be sufficient to hold on high impedance loads. Do not use in these installations.

OPERATION

Switch on the controller. Following a 3 second self-test sequence, you will see the display shown below. It is called the HOME display.

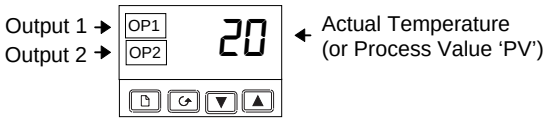

OP1 illuminates when the logic output is ON (normally heating).

OP2 illuminates when the relay output is ON (normally cooling or alarm).

If OP1 or OP2 are configured as alarm outputs (instead of heating and cooling), they will flash when a new 'unacknowledged' alarm occurs and go steady when the alarm is acknowledged but still true.

TO ACKNOWLEDGE A NEW ALARM

Press [D] and [C] together. This will also reset any latched alarms that are no longer true.

ALARM MESSAGES

If an alarm occurs a message will be flashed in the display. This alternates with the measured temperature as shown below:

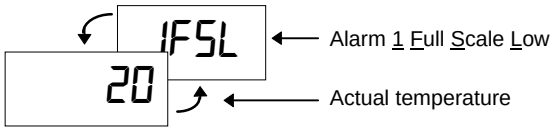

All of the possible messages are shown in this table.

Possible messages	
-FSH	Alarm - Full Scale High
-FSL	Alarm - Full Scale Low
-dEU	Alarm - Deviation
-dHi	Alarm - Deviation High
-dLo	Alarm - Deviation Low
Sbr	Sensor Break
Lbr	Loop Break
LdF	Load Fail
End	End of Timing
In place of the dash the alarm number is shown - Alarm 1 or 2 or 3.	

TO ADJUST THE REQUIRED TEMPERATURE (SETPOINT)

Press and release quickly the [▼] or [▲] button. The setpoint will be displayed for 2 seconds.

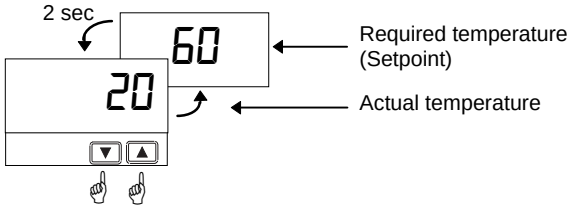

Press and hold [▲] to raise the setpoint
Press and hold [▼] to lower the setpoint

TO VIEW THE DISPLAY UNITS

Press and release quickly the [D] or [C] button. The display units will be flashed for 0.5 sec.

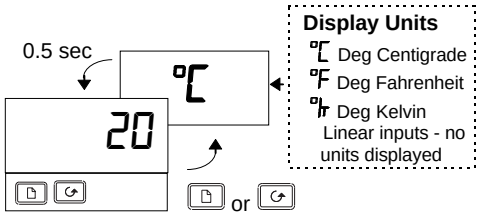

If you get lost, pressing [D] and [C] together will always return you to the HOME display.

If, at any time, no key is pressed within 45 seconds, the display will always return to the HOME display.

TO VIEW THE OUTPUT POWER

Do this if you want to see how much heating or cooling energy is being demanded by the controller. Note: This is not a measure of actual power.

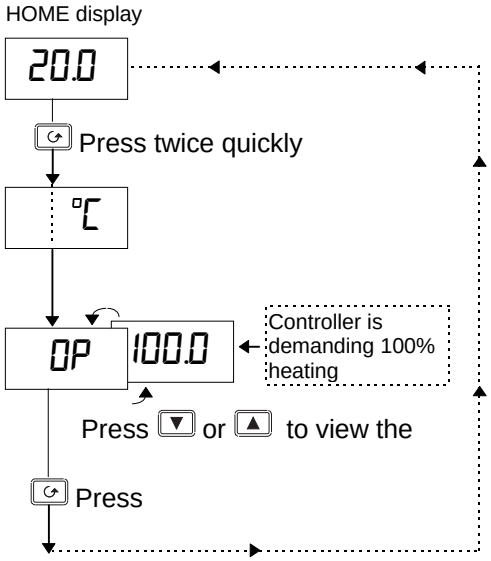

Warning!

In manual standby mode (see 'To Use The Timer') the output power can be adjusted by the operator, causing heating or cooling to be permanently applied. To prevent this make the OP parameter read only (see 'To Hide, Reveal And Promote Parameters')

TO SELECT OR CHANGE OTHER PARAMETERS

Parameters are settings in the controller which you can change to suit the process. They are found under list headings.

Press the button to step through the list headings as shown below.

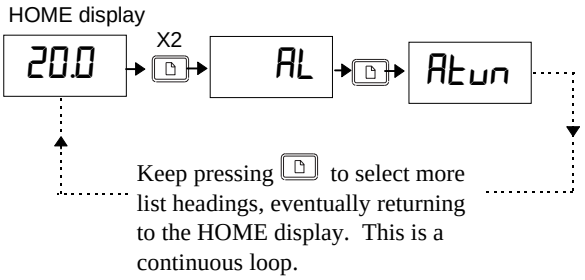

Turn to page 4 to see all of the list headings.

These lists are used to:

- Change alarm setpoints
- Tune the controller to the process
- Manually select PID values
- Change setpoint limits and access the in-built timer
- Change input and output limits

TO ADJUST THE ALARM SETPOINTS (TRIP LEVELS)

Alarm setpoints are found under the AL list.

Press twice to choose the AL list.

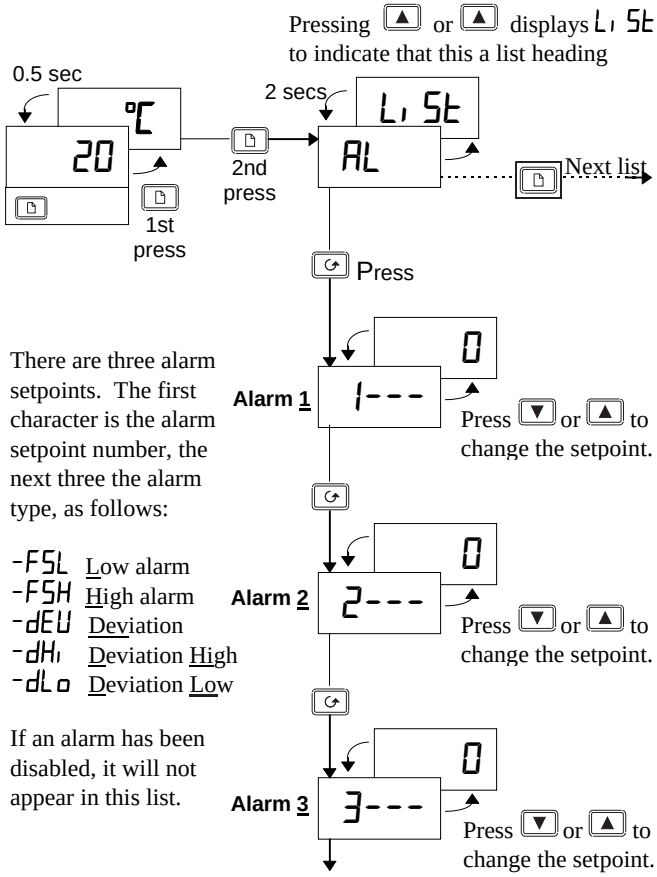

There are three alarm setpoints. The first character is the alarm setpoint number, the next three the alarm type, as follows:

-FSL Low alarm
-FSH High alarm
-dEU Deviation
-dHi Deviation High
-dLo Deviation Low

If an alarm has been disabled, it will not appear in this list.

Note: The other parameters listed on pages 4 and 5 are accessed and adjusted in exactly the same way as this example.

PARAMETER LISTS

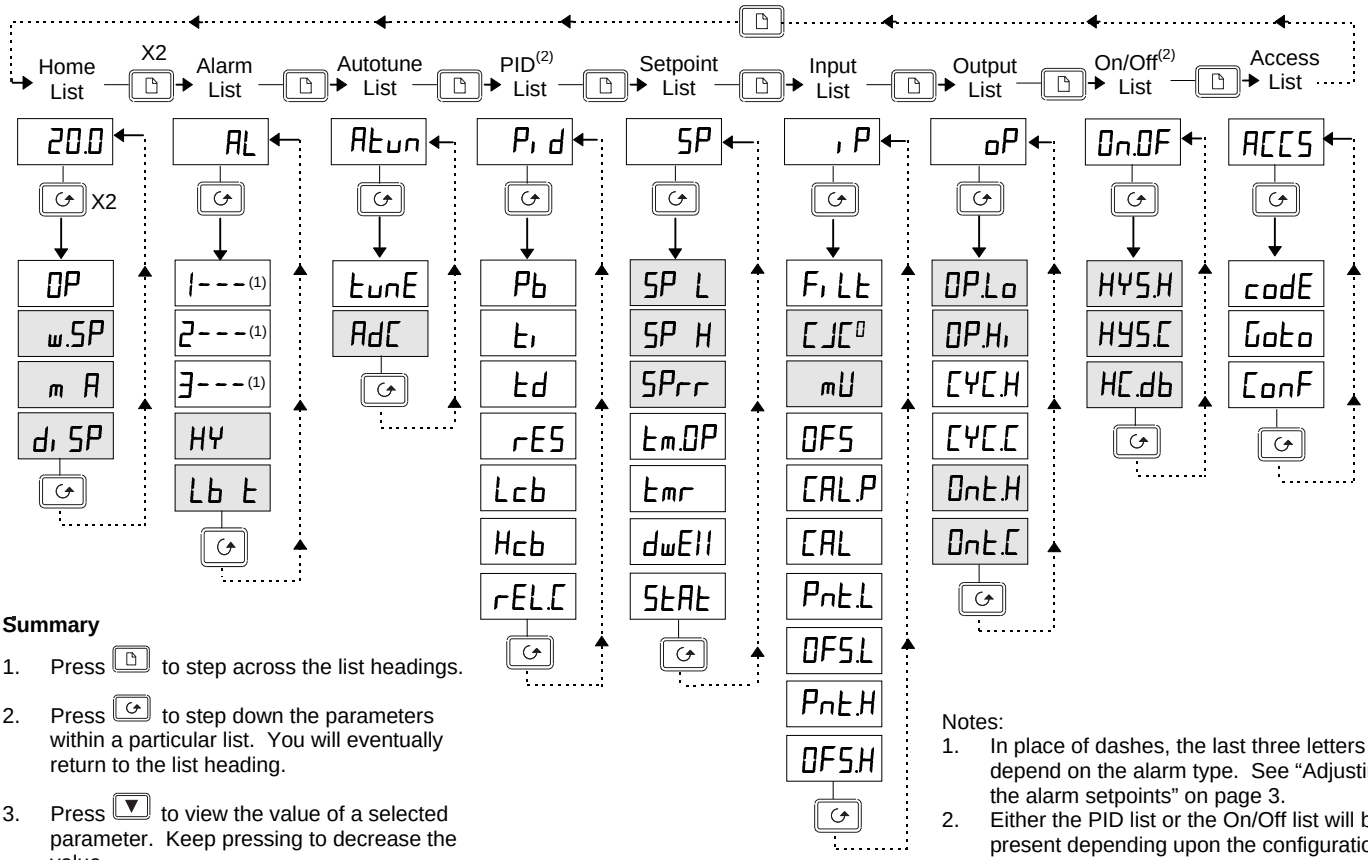

Summary

1. Press [D] to step across the list headings.
2. Press [↻] to step down the parameters within a particular list. You will eventually return to the list heading.
3. Press [▼] to view the value of a selected parameter. Keep pressing to decrease the value.
4. Press [▲] to view the value of a selected parameter. Keep pressing to increase the value.

Notes:
1. In place of dashes, the last three letters depend on the alarm type. See "Adjusting the alarm setpoints" on page 3.
2. Either the PID list or the On/Off list will be present depending upon the configuration of the controller.

Shaded boxes are hidden when shipped from the factory.
To reveal see ''To Hide, Reveal and Promote Parameters" on page 6.

Parameter Tables

	Home List	Adjustable Range	Default setting	Customer setting
OP	Output Power demand in %	-100 = max cooling, 100.0 = max heating.		
w.SP	Working Setpoint	Only appears when setpoint rate limit enabled	Read only	Read only
m-A	Manual/Auto Select	Auto Automatic control selected mAn Manual standby selected	Auto	
di SP	Home Display Options	Std Standard - Shows the process value with the setpoint accessed by pressing the [▼] and [▲] buttons. OP Displays the output power - for use as a manual station. (Only applies to software version 1.4) nonE Blank Display (only alarm messages flashed) PV Displays the Process Value only AL.SP Displays the Alarm 2 Setpoint only Pv.AL Displays the Process Value with Alarm 2 Setpoint accessed by the [▼] and [▲] buttons	Std	

AL	**Alarm List** (See page 3)		Adjustable Range	Default Setting	Customer setting
1---	Alarm 1 Setpoint	In place of dashes, the last three letters indicate the alarm type:	Between low and high setpoint limits	0	
2---	Alarm 2 Setpoint			0	
3---	Alarm 3 Setpoint	-FSL Full Scale Low -FSH Full Scale High -dEv Deviation -dHi Deviation High -dLo Deviation Low		0	
HY	Alarm Hysteresis	1 to 9999 in display units (This value is common to all alarms) Hysterisis is used to prevent the alarm output 'chattering' by setting a difference between the alarm switch ON and switch OFF points		1	
Lb t	Loop Break Time	OFF to 9999 minutes		OFF	

AtUn	**Automatic Tuning List** (See page 10)	Adjustable Range	Default Setting	Customer setting
tunE	Automatic Tune Enable	OFF or on	OFF	
Adc	Automatic Manual reset calculation (when P+D control)	OFF or on	OFF	

PiD	**PID List** (See page 10)	Adjustable Range	Default Setting	Customer setting
Pb	Proportional Band	1 to 999.9 display units	20	
ti	Integral Time	OFF to 9999 seconds	360	
td	Derivative Time	OFF to 9999 seconds	60	
rES	Manual Reset Value (only present if ti = OFF)	-100 to 100.0 %	0.0	
Lcb	Low Cutback	Auto to 999.9 display units	Auto	
Hcb	High Cutback	Auto to 999.9 display units	Auto	
rEL.C	Relative Cool Gain	0.01 to 9.99	1.00	

SP	**Setpoint List** (See "To Use the Timer" on page 6)	Adjustable Range	Default Setting	Customer setting
SP L	Setpoint Low Limit	-1999 to 9999	As per order	
SP H	Setpoint High Limit	-1999 to 9999	As per order	
SPrr	Setpoint Rate Limit	OFF to 999.9 display units per minute	OFF	
tm.OP	Timer Operating Mode	OPt.1 to OPt.5	OPt.1	
tmr	Time Remaining	0 to 9999 minutes	0	
dwEll	Dwell Time	OFF to 9999 minutes	OFF	
StAt	Timer Status	OFF or on	OFF	

iP	**Input List** (See "User Calibration" on page 9)	Adjustable Range	Default Setting	Customer setting
Fi Lt	Input Filter Time Constant	OFF to 999.9 seconds	1.6	
CJC°	Cold Junction Temperature measured at rear terminals		Read only	
mU	Millivolt Input measured at the rear terminals		Read only	
OFS	Process value Offset	-1999 to 9999 display units	0	
CAL.P	Calibration Password	0 to 9999	3	
CAL	User Calibration Enable	FACt Re-instates factory calibration USEr Re-instates user calibration	FACt	
Pnt.L	Low Calibration Point	-1999 to 9999 display units	0	
OFS.L	Low Point Calibration Offset	-1999 to 9999 display units	0	
Pnt.H	High Calibration Point	-1999 to 9999 display units	100	
OFS.H	High Point Calibration Offset	-1999 to 9999 display units	0	

oP	**Output List**	Adjustable Range	Default Setting	Customer setting
OP.Lo	Low Output Power Limit	-100 to 100.0 %	0	
OP.Hi	High Output Power Limit	-100 to 100.0 %	100.0	
CYC.H	Heating Output Cycle Time	0.2 to 999.9 seconds	1.0 Lgc 20 Rly	
CYC.C	Cooling Output Cycle Time	0.2 to 999.9 seconds	5.0 Lgc 20 Rly	
ont.H	Heating Output Minimum On Time	Auto to 999.9 seconds (Auto = 50ms)	Auto	
ont.C	Cooling Output Minimum On Time	Auto to 999.9 seconds (Auto = 50ms)	Auto	

onOF	**On Off Output List**	Adjustable Range	Default Setting	Customer setting
hYS.H	Heating Hysteresis	1 to 9999 display units	1	
hYS.C	Cooling Hysteresis	1 to 9999 display units	1	
HC.db	Heat/Cool Deadband	0 to 9999 display units	0	

ACCS	**Access List** (See "To Hide, Reveal and Promote" parameters on page 6)	Adjustable Range	Default Setting	Customer setting
codE	Access Pass Number	0 to 9999	1	
Goto	Go To Required Access Level		OPEr	
ConF	Configuration Pass Number	0 to 9999	2	

TO HIDE, REVEAL AND PROMOTE PARAMETERS

ACCS — Press [Page] until the Access List Heading is reached.

Press

PASS / CodE — Press [▼] or [▲] to enter the password. The factory default is 1. 'PASS' will be displayed when the correct password has been entered.

Press

Edit / Goto — Press [▼] or [▲] to select 'Edit' level.
Other options are:

OPEr	Operator level - shows selected parameters
FuLL	Reveals the 'FULL' set of parameters
ConF	Gives access to configuration level.

Press to return to the Access list header.

ACCS — You are now in Edit level.
Press [Page] and [Page] to select a parameter in the normal way.

Example:

HidE / 2FSH — High alarm 2 has been selected.
When [▼] or [▲] is pressed, instead of displaying the parameter value, its availability to in Operator level is shown as follows:

ALtr	The parameter will be alterable
HidE	The parameter will be hidden.
rEAd	The parameter will be read-only
Pro	The parmeter will be 'promoted' into the HOME list (see below).

The Pro (Promote) option
Up to twelve commonly used parameters can be 'promoted' into the HOME list. This will give the operator quick access to them by simply pressing the [Page] button. This feature, used in combination with 'hide' and ' read only', allows you to organise the way in which you want your controller formatted.

Example:

Pro / tmr — Time Remaining has been selected.
Press [▼] or [▲] to choose Pro.

The parameter tmr will now appear in the HOME list. Repeat the procedure for any other parameters you wish to promote.
To remove a parameter go to Edit level, select the parameter from the relevant list and change the choice from Pro back to ALtr, rEAd or HidE.

Returning to Operator level
Repeat the above procedure for all the parameters you wish to hide, promote, or make read-only then return to operator level:

OPEr / Goto

1. Press [Page] until you reach the ACCS list heading
2. Press [Page] until you reach Goto
3. Press [▼] or [▲] to select OPEr
4. Press [Page] to return to Operator level

TO USE THE TIMER

- Press [Page] until you reach the SP list
- Press [Page] until you reach the tm.OP parameter
- Press [▼] or [▲] to select the timer operating mode, OPt.1 to OPt.5 as follows:

OPt.1 - Mode 1, Dwell and Switch Off

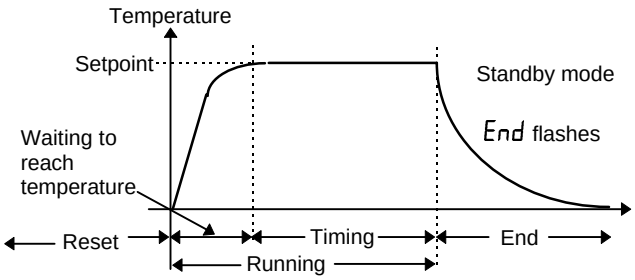

In reset
In reset, you can switch between automatic control and standby mode, using the parameter m-A in the HOME list.
The controller is supplied with the m-A parameter hidden. You must first reveal it. See 'To Hide, Reveal and Promote Parameters'.

Auto / m-A — From the HOME display press [Page] until the m-A parameter is displayed.
Press [▼] or [▲] to select:

Auto	Automatic control
mAn	Standby mode. (the MAN beacon below OP2 will illuminate)

Press [Page] and [Page] together to return to the HOME display

'Automatic control' means control at setpoint, with heating (and cooling) being applied.
'Standby mode' means: the controller is in manual with zero output power. See 'Warning!' on Page 3.

During Running
The controller will always switch to automatic control. Heating (or cooling) will be applied and the temperature will rise (or cool) to the setpoint. When the temperature is within 1°C of setpoint, the timer will start counting down.

During End
When the timer times out, the controller will switch to standby mode. The MAN beacon will light and End will be flashed in the main display. The process will cool down. The timer will remain indefinitely in this state until reset.

When Reset
End will stop flashing. The controller will return to reset in standby mode. It can be returned to automatic control by setting the parameter m-A in the HOME list to Auto.

oPt.2 - Mode 2, Dwell No Switch Off

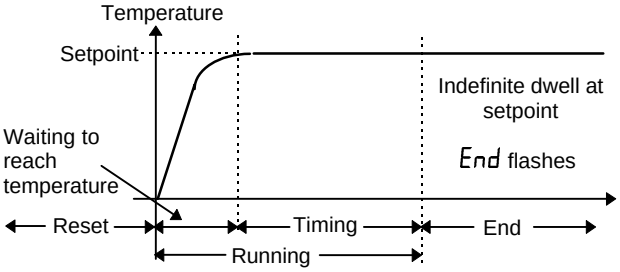

This is the same as mode 1 except that at the end of the timing period the controller will continue indefinitely in automatic control.

oPt.3 - Mode 3, Time from Cold and Switch Off

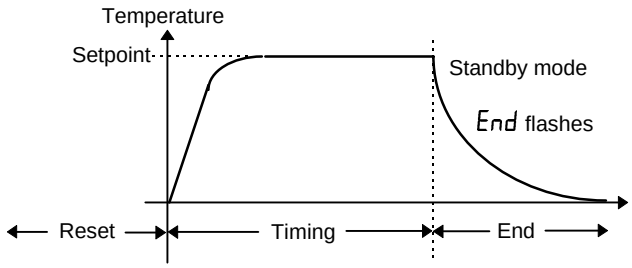

This is the same as mode 1 except that the timer will start counting down immediately without waiting for the temperature to reach setpoint.

oPt.4 Mode 4, Time from Cold No Switch Off

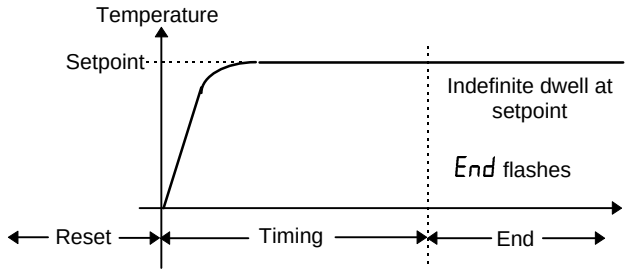

This is the same as mode 2 except that the timer will start counting down without waiting for the controller to reach setpoint.

oPt.5 Mode 5, Delayed Switch On

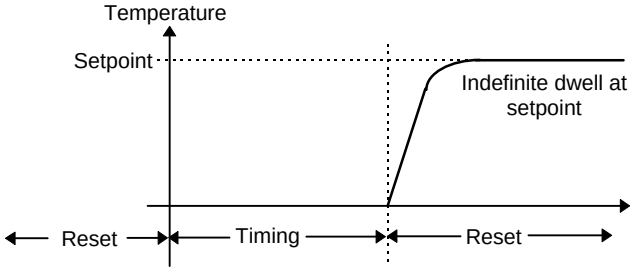

This mode applies a time delay before turning on the heating (or cooling). When the timer is started, the controller will always switch to standby mode and start counting down. When the timer has timed out, the controller will switch into automatic control, apply heating (or cooling) and control indefinitely at the setpoint.

To Program a Ramp-Dwell profile

A simple ramp-dwell profile can be programmed using SPrr (setpoint rate limit) in combination with the timer. To use this feature, first reveal SPrr and w.SP (the working setpoint) using the method described in "To Hide, Reveal and Promote" parameters. w.SP will then appear in the HOME list.

Set SPrr to the required ramp rate. It is adjustable in 1/10th of the least significant display units per minute. That is if the display is configured 0 to 1000°C, setpoint rate limit can be adjusted between 0.1 and 999.9 ^{o}C per minute.

When setpoint rate limit has been enabled and the timer is started, the working setpoint, wSP, will first step to the measured temperature and then ramp at the setpoint rate limit, SPrr, to the target setpoint.
In modes 1 and 2 timing will start when the measured temperature is within 1°C of the target setpoint. In modes 3 and 4 it will start when wSP is within 1°C of the target setpoint.

TO START AND RESET THE TIMER

There are two methods:

Method 1.
This is the simplest method to control the timer.

- Press [page] until you reach the SP list
- Press [scroll] until you reach the tmr parameter (time remaining).

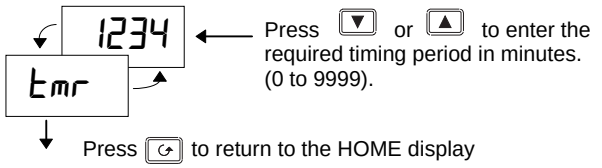

TIP: Promote tmr to the HOME list for quick access, as described in 'To Hide, Revealing and Promote Parameters.

As soon as a value is entered into tmr timing will commence. tmr will count down towards zero. During the timing period tmr can be increased or decreased according to the demands of the process. Setting the value to zero will end the timing period.

When tmr reaches zero. 'End' will flash in the main display. The timer will remain indefinitely in this state until a new value is entered, when the timer will restart.
To reset the timer, press [scroll] and [page] together. 'End' will stop flashing .
To restart the timer, enter a new value into tmr.

Method 2.
Use this method if you want to set a fixed time and use the StAt parameter to start and stop the timer.

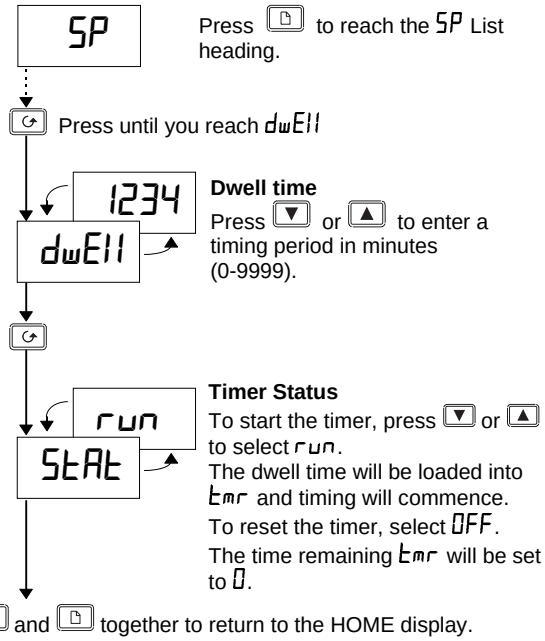

The StAt parameter can also be switched between OFF and run by configuring the logic I/O as a Off/run contact closure input.
Open the external contact to select run. This is an edge triggered action. Close the contact to select OFF. OFF is forced whenever the contact is closed.

CONFIGURING THE CONTROLLER

Select configuration level to change: •The type of control •The display units •The input sensor type• The scaling of linear inputs •The alarm configuration • The passwords.

To select configuration level

ACCS Press to reach the Access List Heading.

Press

CodE PASS Press or to enter the password. The factory default is 1. PASS will be displayed when the correct password has been entered.

Press

GotO conF Press or to select conF

Press

ConF PASS Press or to enter the configuration level password. The factory default is 2. PASS will be displayed when the correct password

Press to enter configuration level.

→ Press to step across the configuration list headings.

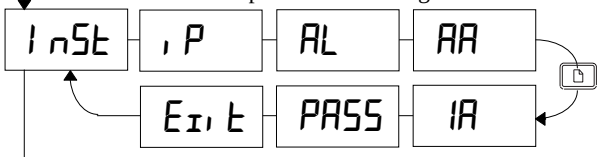

Having selected a list heading, press to select a parameter within a particular list. Press and to change the setting.

Instrument Configuration

InSt	Instrument Configuration	Options	Description
unit	Display units	°C	Centigrade
		°F	Fahrenheit
		°K	Kelvin
		nonE	None
dEC.P	Decimal places in display	nnnn	None
		nnn.n	One
		nn.nn	Two
CtrL	Control type	Pid	PID Control
		On.OF	On/off Control
		AL	Converts the controller to an alarm unit
Act	Control action	rEv	Reverse (normal action for temperature control)
		dir	Direct (output decreases as PV falls below SP)
Pd.tr	Manual reset tracking (PD control)	HoLd	In Auto holds manual reset value
		trAc	In Auto tracks output for bumpless A/M transfer

Input Configuration

iP	Sensor Input	Options	Meaning
inPt	Input type	J.tc	J thermocouple
		K.tc	K thermocouple
		L.tc	L thermocouple
		r.tc	R thermocouple
		b.tc	B thermocouple
		n.tc	N thermocouple
		t.tc	T thermocouple
		S.tc	S thermocouple
		PL 2	Platinell II
		rtd	100Ω Pt thermometer
		mV	Linear mV
		C.tc	Custom input(C=default)
CJC	Cold junction compensation (only appears for TC inputs)	Auto	Automatic
		0°C	0°C external reference
		45°C	45°C external reference
		50°C	50°C external reference
Linear input scaling (Range -12 to +80mV)			
InP.L	mV input low		
InP.H	mV input high		
VAL.L	Displayed value low		
VAL.H	Displayed value high		
ImP	Sensor break input impedance	OFF	Off (Linear inputs only)
		Auto	1.5KΩ
		Hi	5KΩ
		Hi Hi	15KΩ,

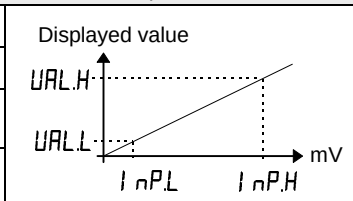

Alarm Configuration

The AL list configures the three internal 'soft' alarms and causes the appropriate alarm message to be flashed in the HOME display.

At this stage the alarm is indication only (known as a 'soft alarm'). To make the alarms operate the relay or logic outputs, follow the instructions under "Relay and Logic input/output Configuration.

AL	Alarm	Type	Meaning
AL 1	Alarm 1	OFF	The alarm is disabled
		FSL	Full Scale Low alarm
		FSH	Full Scale High alarm
		dEv	Deviation band alarm
		dHi	Deviation high alarm
		dLo	Deviation low alarm
LtCh	Alarm latching	no	Non-latching
		YES	Latched with automatic* resetting.
		mAn	Latched with manual* resetting.
bLoc	Alarm blocking	no	No blocking
		YES	Blocked until first good
The above sequence is repeated for: AL 2 (Alarm 2) and AL 3 (Alarm 3)			
SP.Li	Alarm setpoint limits	dis	Limited by display range
		Con	Limited by setpoint limits

*Automatic resetting means that, once the alarm has been acknowledged, it will automatically clear when it is no longer true.
*Manual resetting means that the alarm must first clear before it can be reset.

Relay and Logic input/output Configuration

Note: The logic I/O can be configured as an output or a contact closure input for alarm acknowledge, keylock, or timer run/reset.

AA	Relay output	Options	Meaning
IA	**Logic I/O**		
Id	Identity of output	rELY	Relay
		LOG	Logic
Func	Function	diG	Digital (alarm) output
		HEAt	Heating output
		COOL	Cooling output
	These functions are only appear for the logic I/O	SSr.I	PDSIO mode 1
		Ac.AL	Alarm Acknowledge
		Loc.b	Keylock digital input
		rrES	Run/reset timer
diG.F	Digital output functions	noch	No change
		CLr	Clear all alarms
		IFSL	Alarm 1 *(See note 1)*
		2FSH	Alarm 2 *(See note 1)*
	See below: " To Operate the relay or logic output from an alarm or digital function"	3FSL	Alarm 3 *(See note 1)*
		nw *	New alarm
		Sbr *	Sensor break alarm
		Lbr *	Loop break alarm
		LdF *	Load fail alarm
		mAn *	Man mode active
		End *	End of timing
		tmG1 *	Timer running
		tmG2 *	Timer counting down
	(See note 2)	tmG3 *	Timer running
	(See note 2)	tmG4 *	Timer counting down
SEnS	Sense of the output	nor	Normal (heating or cooling outputs)
		Inu	Inverted (for alarms de-energises in alarm)

* These alarms are always non-latching. Process alarms 1, 2 and 3 are configurable as alarm latching or non-latching, see the 'AL' List

Note 1: The last three letters will correspond to the alarm type configured in the AL list. If the alarm is disabled, AL 1 or AL 2 or AL 3 will be shown.

Note 2: tmG.3 and tmG.4 are special functions. If selected, they illuminate the logic or relay output beacons, OP1 and OP2, without operating the actual output. They are used to indicate that timing is in progress while leaving the actual outputs to be operated by the other digital functions such as the END condition which can be used to operate an external klaxen.

To Operate the Relay or Logic output from an alarm or digital function.

1. Press [▣] until you reach Func
2. Press [▼] or [▲] to select Func = diG
3. Press [▣] to reach diG.F
4. Press [▼] or [▲] to select a alarm or digital function
5. Leave for 2 seconds. The display returns to diG.F and connects the selected alarm or digital function to the relay or logic output.
6. Press [▼] or [▲] again. Two decimal points will appear in the function that has been added to the output.

Multiple Alarms on one Output

Any number of alarms or digital functions can be added to the relay or logic output by repeating steps 4, 5 and 6 above. Two decimal points will appear in those functions that has been added to the output.

.....Continued in the next column

To Clear Alarms from an Output

1. Press [▣] until to reach diG.F
2. Press [▼] or [▲] to select CLr
3. Leave for 2 seconds. The display returns to diG.F which disconnects all alarms from the relay.

Passwords

PASS	Passwords	Range	Default
ACC.P	Full and Edit level password	0-9999	1
CnF.P	Configuration level password	0-9999	2
CAL.P	User calibration password	0-9999	3

To leave Configuration level

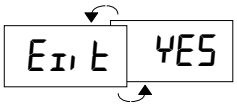

Press [▣] to reach the 'EXIt' display
Press [▼] or [▲] to select 'YES' After 2 secs the display will blink and return to the HOME display in Operator level.

Diagnostic Alarms

In addition to the normal process alarms, the following diagnostics alarm messages are provided.

Message	Meaning and (Action)
EE.Er	*Electrically Erasable Memory Error:* A parameter value has been corrupted. Contact Eurotherm Controls.
Hw.Er	*Hardware error.* (Return for repair)
LLLL	*Low display range exceeded:* (Check input signal)
HHHH	*High display range exceeded:* (Check input signal)
Err1	*Error 1: ROM self-test fail.* (Return for repair)
Err2	*Error 2: RAM self-test fail.* (Return for repair)
Err3	*Error 3: Watchdog fail.* (Return for repair)
Err4	*Error 4: Keyboard failure.* Stuck button, or a button was pressed during power up.
Err5	*Error 5: Input circuit failure.* (Return for repair)
Pwr.F	*Power failure.* The line voltage is too low.
tU.Er	Tune Error. Appears if auto-tuning exceeds 2 hours.

USER CALIBRATION

Your controller has been calibrated for life against known reference sources. User calibration allows you to apply offsets to compensate for sensor and other system errors. The parameter OFS in the IP list applies a fixed offset over the whole display range. You may also apply a 2-point calibration as follows:

- Press [▣] until you reach the IP list
- Press [▣] until you reach the CAL.P parameter
- Press [▼] or [▲] to enter the password. The factory default is 3. PASS will be displayed when the correct has been entered.
- Press [▣] to reach the CAL parameter
- Press [▼] or [▲], to select USEr (FAct will restore the factory calibration)
- Press [▣] to select in turn the four parameters shown in the graph below. Use [▼] or [▲] to set the desired calibration points and the offsets to be applied at each point. The IP list on page 5 describes each of the parameters.

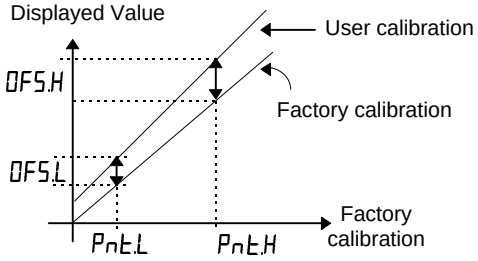

AUTOMATIC TUNING

In PID control, the output from the controller is the sum of three terms: **P**roportional, **I**ntegral and **D**erivative. These three terms deliver just the right amount of power to hold the temperature at setpoint without oscillation. For stable control, the PID values must be 'tuned' to the characteristics of the process being controlled. In the 2132 and 2116 this is done automatically using advanced tuning techniques.
Automatic tuning is performed by switching the output of the controller On and Off to induce an oscillation in the measured temperature. From the amplitude and period of the oscillation, the PID values, shown in the table below, are calculated.

Parameter	Display	Meaning or Function
Proportional band	Pb	The bandwidth in °C or °F over which the output power is proportioned between minimum and maximum.
Integral time	ti	Determines the time taken by the controller to remove steady-state error signals.
Derivative time	td	Determines how strongly the controller will react to the rate-of-change of temperature.
Low cutback	Lcb	The number of °C or °F below setpoint at which the controller will cutback the output power to prevent overshoot on heat up.
High Cutback	Hcb	The number of °C or °F above setpoint at which the controller will increase the output power to prevent undershoot on cool down.
Relative cool gain	rEL.C	Only present if cooling has been configured. Sets the cooling proportional band by dividing the Pb value by the rEL.C value.

If the process cannot tolerate 100% heating or cooling during tuning, the power can be restricted by the heating and cooling limits in the Output list. However, the measured value *must* oscillate to some degree for the tuner to determine values.
Tuning is normally performed only once during the initial commissioning of the process. However, if the process under control subsequently becomes unstable (because its characteristics have changed), you can re-tune again at any time.
It is best to tune starting with the process at ambient temperature. This allows the tuner to calculate more accurately.

Heating and Cooling Output Cycle Times

Before commencing a tuning cycle, set the values of CYC.H (heating output cycle time) and CYC.C (cooling output cycle time) in the oP (output) list.
For a logic heating output (switching a SSR), set CYC.H to 1.0 sec.
For a relay output, set CYC.H to 20.0 sec.
For a logic cooling output used to control a solenoid valve, set CYC.C to 5.0 sec.

Tuning procedure

1. Set the setpoint to the value at which you will normally operate the process.
2. In the 'AtUn' list, select 'tunE' and set it to 'on'
3. Press the Page and Scroll buttons together to return to the HOME display. The display will flash 'tunE' to indicate that tuning is in progress.
4. The controller will induce an oscillation in the temperature by turning the heating on and then off.
5. After two cycles of oscillation the tuning will be completed and the tuner will switch itself off.
6. The controller will then calculate the tuning parameters and resume normal control action.

If you want 'Proportional only' or 'P+D' or 'P+I' control, you should set the 'ti ' or 'td' parameters to OFF before commencing the tuning cycle. The tuner will leave them off and will not calculate a value for them.

Typical automatic tuning cycle

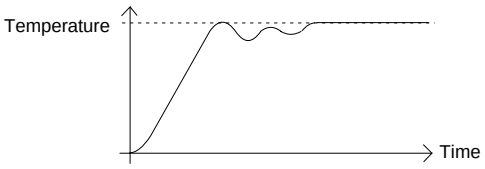

Calculation of the cutback values

When low cutback or high cutback is set to 'Auto' their values will be fixed at three times the proportional band, and will not be altered during automatic tuning. If set to any other value, they will be calculated as part of the tuning process.

MANUAL TUNING

If for any reason automatic tuning gives unsatisfactory results, you can manually tune the controller.
Proceed as follows:
With the process at its normal running temperature:

1. Set the *Integral Time* 'ti ' and *Derivative Time* 'td' to OFF.
2. Set *High Cutback* 'Hcb' and *Low Cutback* 'Lcb', to 'Auto'
3. Ignore the fact that the temperature may not settle precisely at the setpoint
4. Reduce the *proportional band* 'Pb' until the temperature just starts to oscillate. If the temperature is already oscillating, increase the proportional band until it just stops oscillating. Allow enough time between each adjustment for the temperature to stabilise. Make a note of the proportional band value 'B' and the period of oscillation 'T'.
5. Set the PID parameter values according to the formula below:

Type of control	Proportional band 'Pb'	Integral time 'ti '	Derivative time 'td'
Proportional only	2xB	OFF	OFF
P + I	2.2xB	0.8xT	OFF
P + I + D	1.7xB	0.5xT	0.12xT

Setting the cutback values

The above procedure sets up the parameters for optimum steady state control. If unacceptable levels of overshoot or undershoot occur during start-up or for large step changes in temperature, then manually set the cutback parameters Lcb and Hcb.
Proceed as follows:

1. Set the low and high cutback settings to 3 x the proportional band (that is to say, Lcb = Hcb = 3 x Pb).
2. Note the level of overshoot or undershoot that occurs for large temperature changes (see the diagrams below).

In example (a) increase Lcb by the overshoot value. In example (b) reduce Lcb by the undershoot value.

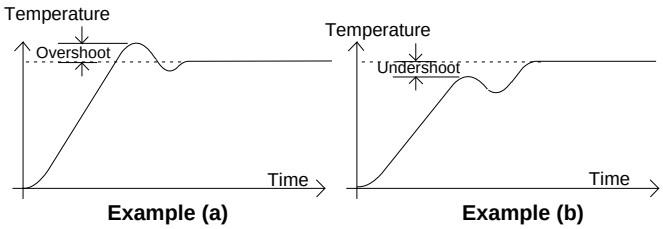

When the temperature approaches the setpoint from above, you can set Hcb in a similar manner.

Manual reset

When ti = OFF *manual reset* (rES) appears in the Pid LiSt. This parameter sets the output power when the error signal is zero. It can be manually adjusted to remove steady state error - the function normally performed by the Integral term.

ORDERING CODE

The controller is supplied configured according to the ordering code shown below.

Model number	Function	Supply voltage	Manual	Output 1 (Logic)	Output 2 (Relay)	Sensor input	Setpoint min	Setpoint max	Units	External relay module	Input adaptor
2132 2116											

Function	
CC	PID controller
NF	On/Off controller
TC	PID controller + timer
TN	On/Off controller + timer

Supply voltage	
VH	85-264Vac
VL	20 -29V dc or ac

Manual	
XXX	None
ENG	English
FRA	French
GER	German
NED	Dutch
SPA	Spanish
SWE	Swedish
DEN	Danish
ITA	Italian

Output 1: Logic	
XX	Disabled
Logic output	
LH	Heating
LC	Cooling
M1	PDSIO mode 1
FH	High alarm 1
FL	Low alarm 1
DB	Dev band alarm 1
DL	Dev. low alarm 1
DH	Dev. high alarm 1
NW	New alarm
Logic input	
AC	Alarm ack/reset
KL	Keylock
TM	Timer Run/Reset

Output 2: Relay	
XX	Disabled
RH	Heating
RC	Cooling
FH	High alarm 2
FL	Low alarm 2
AL	High alarm 2 & low alarm 3
DB	Dev band alarm 2
DL	Dev. low alarm 2
DH	Dev. high alarm 2
NW	New alarm

Sensor input		Display range and Setpoint min & max limits	
Thermocouples		°C	° F
J	Type J	-210 to 1200	-340 to 2192
K	Type K	-200 to 1372	-325 to 2500
T	Type T	-200 to 400	-325 to 750
L	Type L	-200 to 900	-325 to 1650
N	Type N	-200 to 1300	-325 to 2370
R	Type R	-50 to 1768	58 to 3200
S	Type S	-50 to 1768	-58 to 3200
B	Type B	0 to 1820	32 to 3308
P	Platinell II	0 to 1369	32 to 2496
Resistance thermometer			
Z	Pt100	-200 to 850	-325 to1562
Custom downloaded inputs			
C	Type C -W5%Re/W26%Re (default custom sensor)	0 to 2319	32 to 4200
D	Type D - W3%Re/W25%Re	0 to 2399	32 to 4350
E	E thermocouple	-200 to 999	-325 to 1830
1	Ni/Ni18%Mo	0 to 1399	32 to 2550
2	Pt20%Rh/Pt40%Rh	0 to 1870	32 to 3398
3	W/W26%Re (Engelhard)	0 to 2000	32 to 3632
4	W/W26%Re (Hoskins)	0 to 2010	32 to 3650
5	W5%Re/W26%Re (Engelhard)	10 to 2300	50 to 4172
6	W5%Re/W26%Re(Bucose)	0 to 2000	32 to 3632
7	Pt10%Rh/Pt40%/Rh	200 to 1800	392 to 3272
8	Exegen K80 I.R. Pyrometer	-45 to 650	-49 to 1202
Process inputs (linear)			
M	-9.99 to +80mV	Scaleable	-999 to 9999
Y	0 to 20mA	Scaleable	-999 to 9999
A	4 to 20mA	Scaleable	-999 to 9999
V	0 to 10Vdc (*input adapter required)*	Scaleable	-999 to 9999

Units	
C	°C
F	° F
K	Kelvin
X	Linear input

External relay module	
XX	Not fitted
R7	Fitted (Operated by the logic output)

Input Adaptor	
XX	None
V1	0-10Vdc
A1	0-20mA sense resistor (2.49Ω. 0.1%)

TECHNICAL SPECIFICATION

Panel sealing	IP65 (EN 60529), or 4X (NEMA 250)
Operating ambients	0 to 55°C. Ensure that the enclosure is adequately ventilated. 5 to 95%RH, non condensing
Storage temperature	-30°C to +75°C. (Protect from humidity and dust)
Atmosphere	Not suitable for use above 2000m or in explosive or corrosive atmospheres
Power supply	High voltage unit: 100 to 240Vac -15%, +10%, 48-62Hz, 5Watts maximum consumption Low voltage unit: 24Vdc/ac +/- 20%. DC to 62Hz, 5Watts maximum consumption
Relay rating (isolated)	Maximum: 264Vac, 2A resistive. Minimum: 12Vdc, 100mA Mechanical life > 10^7 operations. Electrical life at 1A, 240vac resistive load > 5 x10^6 operations
Wire sizes	Use a minimum of 0.5mm^2 or 16awg wire for plant connections.
Over current protection	Use independent 2A fuses for the indicator supply and relay output. Suitable fuses are EN60127 (type T)
Logic output/input rating	9V at 12mA, non-isolated from sensor input
Electrical safety	Meets EN 61010 (Voltage transients on the power supply must not exceed 2.5kV). Pollution degree 2.
Isolation:	All isolated inputs and outputs have reinforced insulation to protect against electric shock. (See live sensor note)
Cold Junction Compensation	>30 to 1 rejection of ambient temperature changes in automatic mode. Uses INSTANT ACCURACY ™ cold junction sensing technology to eliminate warm up drift and to respond quickly to ambient temperature changes.

SAFETY AND EMC INFORMATION

Safety

This controller complies with the European Low Voltage Directive 73/23/EEC, amended by 93/68/EEC, by the application of the safety standard EN 61010.

Electromagnetic compatibility

It conforms with the essential protection requirements of the EMC Directive 89/336/EEC, amended by 93/68/EEC, by the application of a Technical Construction File. It satisfies the general requirements of the industrial environment defined in EN 50081-2 and EN 50082-2.

GENERAL

The information contained in these instructions is subject to change without notice. While every effort has been made to ensure the accuracy of the information, Eurotherm Controls shall not be held liable for errors contained herein.

Unpacking and storage

The packaging should contain the controller with two panel retaining clips and this instruction leaflet.

If the packaging or the controller are damaged, do not install the product but contact your nearest Eurotherm Controls agent.

SERVICE AND REPAIR

This controller has no user serviceable parts. Contact your nearest Eurotherm Controls agent for repair.

Caution: Charged capacitors

Before removing the controller from its sleeve, switch off the supply and wait two minutes to allow capacitors to discharge. Failure to observe this precaution may damage the indicator or cause some discomfort to the user.

Electrostatic discharge precautions

When the controller is removed from its sleeve, it is vulnerable to damage by electrostatic discharge from someone handling the controller. To avoid this, before handling the unplugged controller discharge yourself to ground.

Cleaning

Do not use water or water based products to clean labels or they will become illegible. Isopropyl alcohol may be used to clean labels. A mild soap solution may be used to clean other exterior surfaces of the product.

Safety Symbols

The following safety symbols are used on the controller:

Caution. Refer to the accompanying documents

Personnel

Installation must be carried out by qualified personnel.

Enclosure of live parts

The controller must be installed in an enclosure to prevent hands or metal tools touching parts that may be electrically live.

Caution: Live sensors

The logic input/output is electrically connected to the sensor input (e.g. thermocouple). In some installations the temperature sensor may become live. The controller is designed to operate under these conditions, but you must ensure that this will not damage other equipment connected to the logic input/output and that service personnel do not touch this connection while it is live. With a live sensor, all cables, connectors and switches for connecting the sensor and non-isolated inputs and outputs must be mains rated.

Wiring

Wire the controller in accordance with the wiring data given in these instructions. Take particular care not to connect AC supplies to the low voltage sensor input or logic outputs. Only use copper conductors for connections, (except thermocouple). Ensure that the installation complies with local wiring regulations. In the USA use NEC Class 1 wiring methods.

Power Isolation

Include a power isolating switch or circuit breaker which disconnects all current carrying conductors. The device should be mounted in close proximity to the controller, within easy reach of the operator and marked as the disconnecting device for the controller.

Voltage rating

The maximum continuous voltage applied between any connection and ground must not exceed 264Vac. For the above reason the controller should not be wired to a three phase supply with an non-grounded star connection. Under fault conditions such a supply could rise above 264Vac with respect to ground and the product would not be safe.

Over-temperature protection

When designing any control system it is essential to consider what will happen if any part of the system should fail. In temperature control applications the primary danger is that the heating will remain constantly on. This could damage the product, the machinery being controlled, or even cause a fire.

Reasons why the heating might remain constantly on include:

- the temperature sensor becoming detached from the process
- thermocouple wiring becoming short circuit;
- the controller failing with its heating output constantly on
- an external valve or contactor sticking in the heating condition

Where damage or injury is possible, we recommend fitting a separate over-temperature protection unit, with an independent temperature sensor, which will isolate the heating circuit.

Please note that the alarm relays within the controller will not give protection under all failure conditions.

Conductive pollution

Electrically conductive pollution must be excluded from the cabinet in which the indicator is mounted. For example, carbon dust is a form of electrically conductive pollution. Where condensation is likely, for example at low temperatures, include a thermostatically controlled heater in the cabinet.

Installation requirements for EMC

- For general guidance refer to Eurotherm Controls EMC Installation Guide, HA025464.
- It may be necessary to fit a filter across the relay output to suppress conducted emissions. The filter requirements will depend on the type of load. For typical applications we recommend Schaffner FN321 or FN612.

Routing of wires

To minimise the pick-up of electrical noise, the sensor input wiring should be routed away from high-current power cables. Where it is impractical to do this, use shielded cables with the shield grounded at both ends.

INTERNATIONAL SALES AND SERVICE

EUROTHERM CONTROLS LTD
Faraday Close, Durrington,
Worthing, West Sussex BN13 3PL
Telephone Sales: (01903) 695888
Technical: (01903) 695777
Service: (01903) 695444
Fax (01903) 695666

Countries not listed enquiries/orders
Eurotherm Controls Ltd
Export Dept,. Faraday Close,
Durrington,
Worthing, West Sussex, BN13 3PL
Telephone (01903) 268500
Fax (01903) 265982

AUSTRALIA Eurotherm Pty. Ltd.
Telephone Sydney (+61 2) 9477 7022
Fax (+61 2) 477 7756

AUSTRIA Eurotherm GmbH
Telephone Vienna (+43 1) 798 7601
Fax (+43 1) 798 7605
Telex 047 1132000 EIAUT A

BELGIUM Eurotherm B.V.
Telephone Antwerp (+32 3) 322 3870
Fax (+32 3) 321 7363

DENMARK Eurotherm A/S
Telephone Copenhagen (+45 31) 871622
Fax (+45 31) 872124

FRANCE
Eurotherm Automation SA
Telephone Lyon (+33 478) 664500
Fax (+33 478) 352490

GERMANY
Eurotherm Regler GmbH
Telephone Limburg (+49 6431) 2980
Fax (+49 6431) 298119
Also regional offices

HONG KONG Eurotherm Limited
Tel. Hong Kong (+852) 2873 3826
Fax (+852) 2870 0148
Telex 0802 69257 EIFEL HX

INDIA Eurotherm India Limited
Telephone Chennai (+9144) 4961129
Fax (+9144) 4961831

IRELAND
Eurotherm Ireland Limited
Telephone Naas (+353 45) 879937
Fax (+353 45) 875123

ITALY Eurotherm SpA
Telephone Como (+39 31) 975111
Fax (+39 31) 977512
Telex 380893 EUROTH I

JAPAN Eurotherm Japan Limited
Telephone Tokyo (+81 3) 33702951
Fax (+81 3) 33702960

KOREA Eurotherm Korea Limited
Telephone Seoul (+82 2) 5438507
Fax (+82 2) 545 9758
Telex EIKOR K23105

NETHERLANDS Eurotherm B.V.
Telephone Alphen a/d Ryn (+31 172) 411752
Fax (+31 172) 417260

NEW ZEALAND
Eurotherm Limited
Telephone Auckland (+64 9) 2635900
Fax: (+64 9) 2635901

NORWAY Eurotherm A/S
Telephone Oslo (+47 66) 803330
Fax (+47 66) 803331

SPAIN Eurotherm España SA
Telephone (+34 91) 6616001
Fax (+34 91) 6619093

SWEDEN Eurotherm AB
Telephone Malmo (+46 40) 384500
Fax (+46 40) 384545

SWITZERLAND
Eurotherm Produkte (Schweiz) AG
Telephone Zurich (+41 55) 4154400
Fax (+41 55) 4154415

UNITED KINGDOM
Eurotherm Controls Limited
Telephone Worthing(+44 1903) 269888
Fax (+44 1903) 269666

U.S.A Eurotherm Controls Inc.
Telephone Reston (+1 703) 787 3405
Fax (+1 703) 787 3436